Base-Line

FWS, FWH System

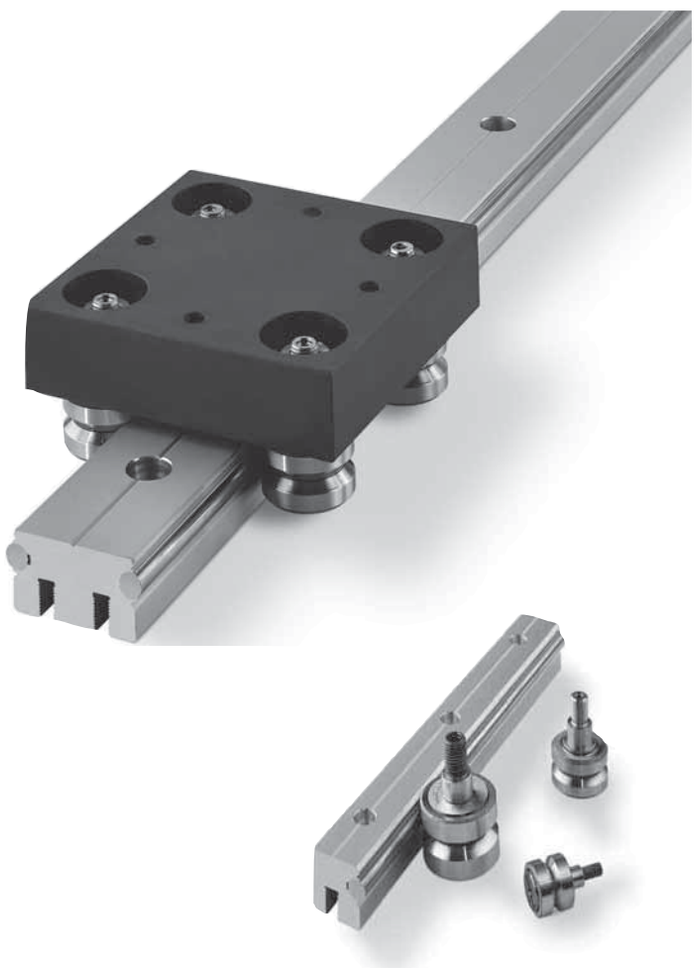

NADELLA

Base-Line

Guide rails FWS

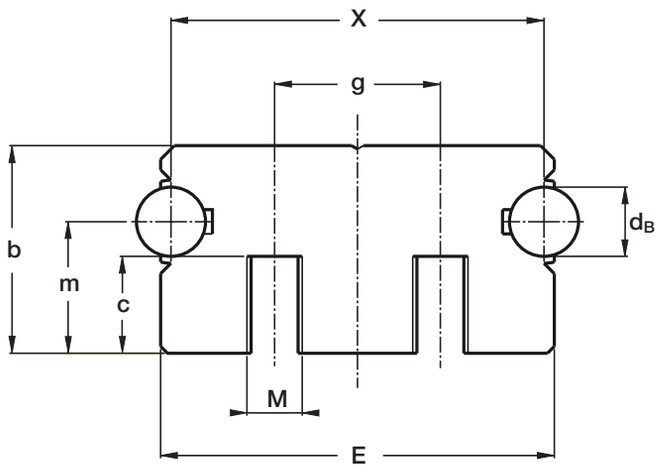

Type	Dimensions (mm)							
	d_B	X	M	g	E	b	m	c
FWS 22	6	34	M 5	16	36	20	14	10
FWS 32	8	42	M 6	20	45	25	17	12
FWS 40	10	54	M 8	24	57	30	19	14
FWS 52	12	66	M 10	32	69	36	24	18
single guide element L=4500 (1)								

Type	Screw distance max.			Moments of inertia (2) cm^4		Weight (kg/m)
	for 2 screw channels		for additional holes (NZ)			
	Distance (mm)	Torque wrench settings (Nm)	Distance (mm)	J_x	J_y	
FWS 22	190	2	220	2.07	6.01	2
FWS 32	210	5	240	5.10	14.56	3.3
FWS 40	250	15	280	11.01	35.26	5
FWS 52	250	23	280	22.85	74.12	7.2

1) Longer rails are supplied in sections with ground butt joints at the rods
2) Inertia value based on equivalent aluminium yield 70000 N/mm² including shafts

Hole layout
- finishes to drawing (**NZ**)
- without holes (**NF**)

Optional features
- ground one end (**R**)
- ground both ends (**RR**)
- stainless steel shafts (**NX**)

Example of standard designation: **FWS32/1500 NF**
See page 17 for standard codification

Base-Line

Guide rails FWH

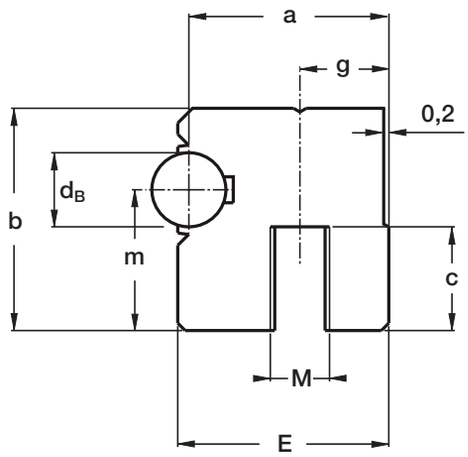

Type	Dimensions (mm)							
	d_B	a	M	g	E	b	m	c
FWH 22	6	17	M5	8	18	20	14	10
FWH 32	8	21	M5	10	22.5	25	17	12
FWH 40	10	27	M8	12	28.5	30	19	14
FWH 52	12	33	M10	16	34.5	36	24	18
Maximum length of single guide element L = 4 500 (1)								

Type	Screw distance max.			Moments of inertia (2) cm^4		Weight (kg/m)
	for 1 screw channels		for additional holes			
	Distance (mm)	Torque wrench settings (Nm)	Distance (mm)	J_x	J_y	
FWH 22	70	2	120	1.02	0.83	1
FWH 32	60	5	130	2.55	2.05	1.6
FWH 40	97	15	150	5.71	4.75	2.5
FWH 52	120	23	150	10.12	11.85	3.6

1) Longer rails are supplied in sections with ground butt joints

2) Inertia value based on equivalent aluminium yield 70000 N/mm² including shafts

Hole layout
- finishes to drawing (**NZ**)
- without holes (**NF**)

Optional features
- ground one end (**R**)
- ground both ends (**RR**)
- stainless steel shafts (**NX**)

Example of standard designation: **FWH32/1500 NF**

See page 17 for standard codification

Base-Line

Guide rollers FR..EU

concentric

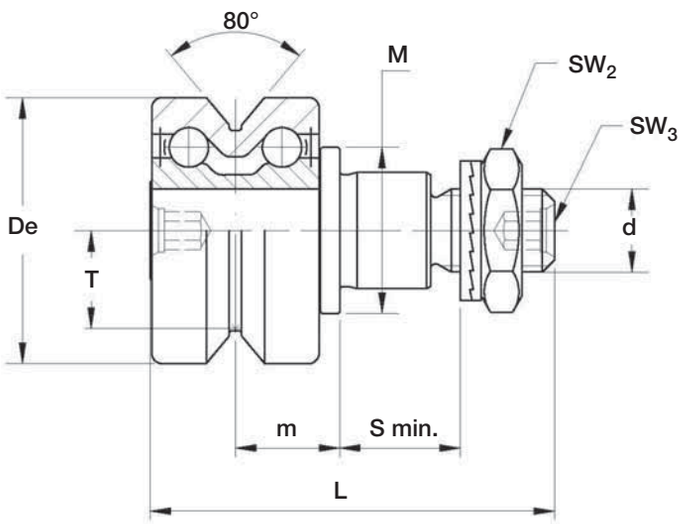

eccentric

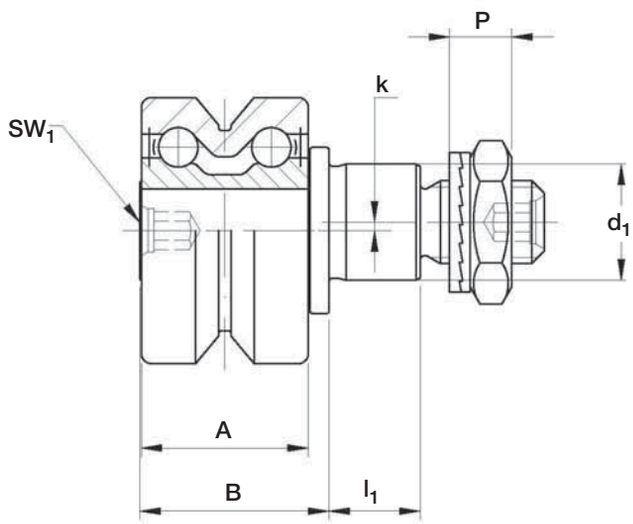

The sides of the race are slightly convex

Type		Dimensions (mm)															
concentric	eccentric	De	d_1 (1)	d	T	m	S_{min}	P	L	A	B	l_1	M	SW_1	SW_2	SW_3	k
FR 22 EU(4)	**FRR 22 EU**(4)	22	9	M 6 x 1	7.7	9.4	9	6.5	36.8	15	18	8	14	4	10	3	0.8
FR 32 EU(4)	**FRR 32 EU**(4)	32	14	M 10 x 1.25	11.8	12.6	12	8.5	48.9	20.2	22.9	11	20	4	17	4	1
FR 40 EU(4)	**FRR 40 EU**(4)	40	16	M 12 x 1.5	14.6	15.5	12	10.4	58.5	25	29.5	11	22	5	19	5	1
FR 52 EU	**FRR 52 EU**	52	21	M 16 x 1.5	19.1	19.8	15	11.4	69.5	32	36.5	14	28	6	24	6	1.5

Type		Dynamic load (N)	Limit loads (N)		Life coefficients		Torque wrench settings (2) (Nm)	Weight (g)
		C_w (4)	radial F_r	axial F_a	X	Y		
FR 22 EU	**FRR 22 EU**	2 900	1 400	420	1	2	3	45
FR 32 EU	**FRR 32 EU**	5 800	2 000	800	1	1.9	20	125
FR 40 EU	**FRR 40 EU**	8 500	3 650	1 400	1	1.9	26	230
FR 52 EU	**FRR 52 EU**	11 700	8 500	3 000	1	1.9	64	510

1) Housing bore tolerance: H7
2) The torque wrench settings are given for non-lubricated threads; for lubricated threads, multiply figure by 0.8
3) Cw basic load for 100 km
4) FR/R 22, 32, 40 are available in stainless steel (**NX**)

The guide rollers are complete with self-locking washers and hexagonal nut (DIN439B) for fitting
Pressure angle α for load calculation: 40°
NBR seals RS type

Base-Line

Guide Rollers FR..EU AS, FR..EU AZ

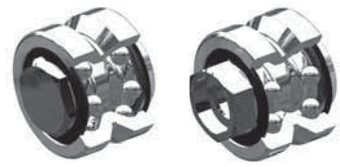

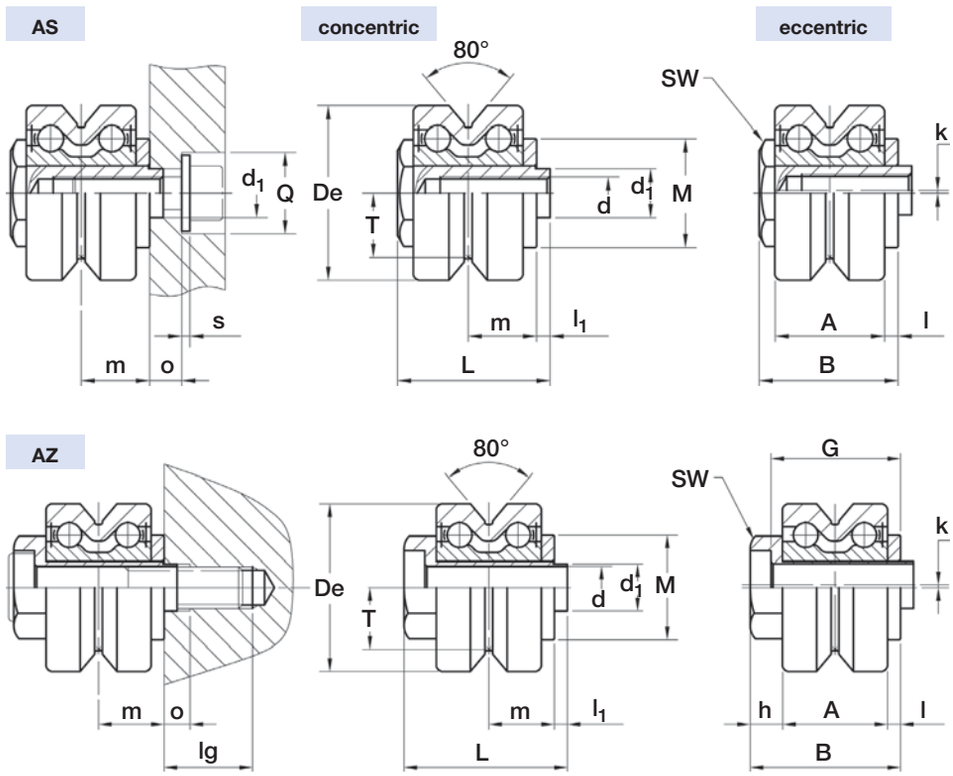

Type		Dimensions (mm)																		
concentric	eccentric	De	d1 (1)	d (2)	T	m	L	A	B	l_1	l	h	M	SW	G	o	Q	lg (6)	s	k
FR 22 EU AS (5)	**FRR 22 EU AS (5)**	22	6	M 5	7.7	9.4	21.8	15	19.8	2	1.9	-	14	10	-	4.5	10	-	0	0.5
FR 32 EU AS (5)	**FRR 32 EU AS (5)**	32	9	M 6	11.8	12.6	28.1	20.2	25.6	2.5	2.5	-	20	17	-	6	15	-	1.5 (4)	0.5
FR 40 EU AS (5)	**FRR 40 EU AS (5)**	40	11	M 8	14.6	15.5	33.5	25	31	2.5	3	-	22	22	-	6.5	20	-	2 (4)	1
FR 52 EU AS	**FRR 52 EU AS**	52	16	M10	19.1	19.8	43.2	32	40	3.2	3.8	-	28	27	-	8	24	-	2.5(4)	1.5
FR 22 EU AZ (5)	**FRR 22 EU AZ (5)**	22	6	5.1	7.7	9.4	23.9	15	21.9	2	1.9	5	14	11	18.9	4	-	13	-	0.5
FR 32 EU AZ (5)	**FRR 32 EU AZ (5)**	32	9	8.1	11.8	12.6	31.4	20.2	28.9	2.5	2.5	6.2	20	17	24.9	5	-	17	-	0.5
FR 40 EU AZ (5)	**FRR 40 EU AZ (5)**	40	11	10.1	14.6	15.5	38	25	35.5	2.5	3	7.5	22	22	30.5	5	-	26	-	0.8
FR 52 EU AZ	**FRR 52 EU AZ**	52	16	14.1	19.1	19.8	49.5	32	46.3	3.2	3.8	10.5	28	27	39.3	5.5	-	27	-	1.5

Guide roller size	Dynamic load (N)	Limit loads (N)		Life coefficients		Weight AS (g)	Weight AZ (g)	On re quest for AZ screw DIN7984
	Cw (3)	radial F_r	axial F_a	X	Y			
22	2 900	470	210	1	2	33	31	M 5 x 30
32	5 800	1 590	710	1	1.9	95	93	M 8 x 40
40	8 500	2 120	940	1	1.9	173	173	M10 x 50
52	11 700	5 830	2 560	1	1.9	374	365	M14 x 60

1) Housing bore tolerance: H7
2) Safety threads SPIRALOCK
3) Cw basic load for 100 km
4) Guide roller with washers DIN134 without screw DIN7984 or DIN912
5) FR/R 22, 32, 40 AS and AZ are available in stainless steel (**NX**)
6) AZ: minimum length of the thread engaged
steel = 1 x d
cast iron = 1.25 x d
aluminium = 2 x d

AS screws length: min = d+o+s; max = m+4+o+s

NBR seals RS type
Pressure angle α for load calculation: 40°

Base-Line

Floating guide rollers FRL..EU

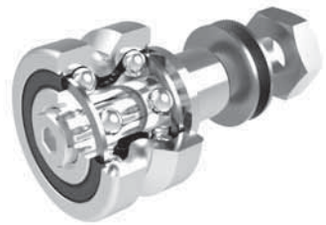

concentric

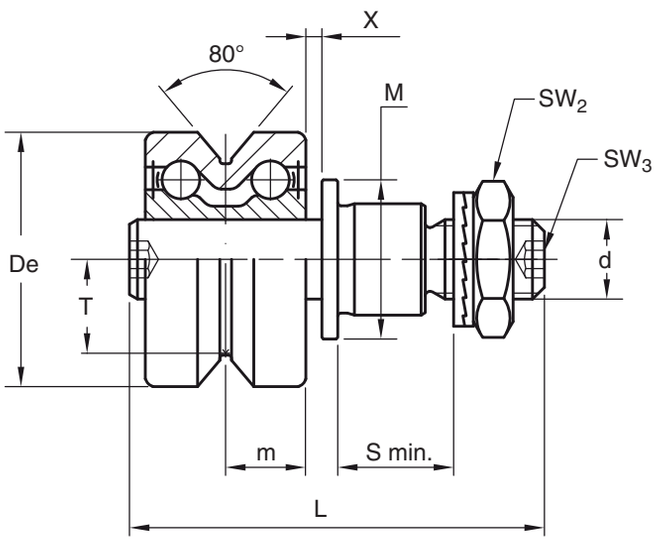

eccentric

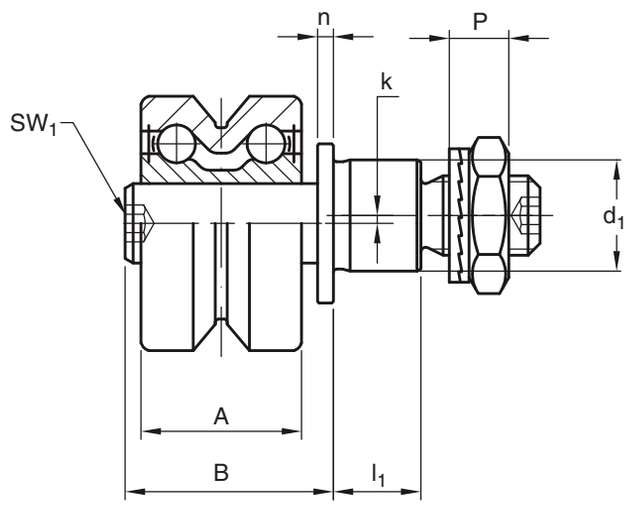

The race ways are slightly convex

Type		Dimensions (mm)																	
concentric	eccentric	De	d_1 1)	d	T	m	S_{min}	P	L	A	B	l_1	M	n	X	SW_1	SW_2	SW_3	k
FRL 22 EU 5)	**FRLR 22 EU** 5)	22	9	M6 x 1.0	7.7	7.5	9	6.5	39.3	15.0	20.5	8.0	14.0	1.5	2	4	10	3	0.8
FRL 32 EU 5)	**FRLR 32 EU** 5)	32	14	M10 x 1.25	11.8	10.1	12	8.5	52.2	20.2	26.2	11.0	20.0	2	2	4	17	4	1.0
FRL 40 EU 5)	**FRLR 40 EU** 5)	40	16	M12 x 1.5	14.6	12.5	12	10.4	61.4	25.0	32.4	11.0	22.0	2.4	2.5	5	19	5	1.0
FRL 52 EU	**FRLR 52 EU**	52	21	M16 x 1.5	19.1	16.0	15	11.4	74	32.0	41.0	14.0	28.0	3	3	6	24	6	1.5
FRL 62 EU	**FRLR 62 EU**	62	27	M20 x 1.5	22.1	16.8	18.5	12.4	83.6	33.6	42.6	17.5	35.0	3	3	8	30	8	2.0

Type		Dynamic load (N)	Limit load (N)	Limit load Inox version (N) NX	Torque wrench setting 2) (Nm)	Weight (g)
		C_w 4)	radial F_r	radial F_r		
FRL 22 EU	**FRLR 22 EU**	2900	1050	980	3	46
FRL 32 EU	**FRLR 32 EU**	5800	1700	1550	20	127
FRL 40 EU	**FRLR 40 EU**	8500	3000	2750	26	233
FRL 52 EU	**FRLR 52 EU**	11700	7600	6850	64	520
FRL 62 EU	**FRLR 62 EU**	13900	11000	10300	120	776

1) Housing bore tollerance: H7
2) The torque wrench settings are given for non-lubricated threads; for lubricated threads multiply figure by 0.8
3) Weight without fittings
4) Cw = Basic load for 100 Km
5) Dimensions for stainless steel (**NX**) version

Standard seals: material NBR, RS type
Guide rollers include self-locking washers and hexagonal nut (DIN 439B)
Pressure angle α for load calculation: 40°

Base-Line

Carriage T4FR

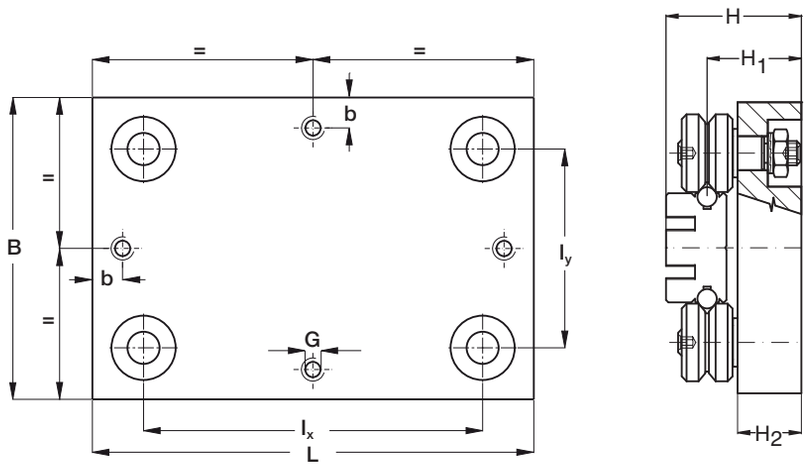

Type	Dimensions (mm)									Weight (kg)	Suggested combinations
	L	B	l_x	l_y	H	H_1	H_2	G	b		
T4FR 22 90	90	90	59	58.7	42.4	28.4	19	M6	15	0.6	**FWS 22**
T4FR 22 150	150	90	119	58.7	42.4	28.4	19	M60	15	0.9	**FWS 22**
T4FR 32 120	120	120	78	78	58.6	41.6	29	M8	15	1.5	**FWS 32**
T4FR 32 180	180	120	138	78	58.6	41.6	29	M80	15	2.1	**FWS 32**
T4FR 40 150	150	150	99	98.8	63.5	44.5	29	M8	15	2.6	**FWS 40**
T4FR 40 220	220	150	169	98.8	63.5	44.5	29	M80	15	3.4	**FWS 40**
T4FR 52 190	190	190	123	123	82.8	58.8	39	M10	20	5.4	**FWS 52**
T4FR 52 260	260	190	203	123	82.8	58.8	39	M10	20	6.8	**FWS 52**

Base-Line

Guide Rollers combination

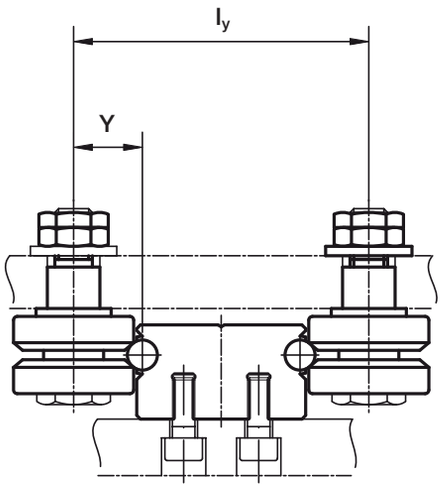

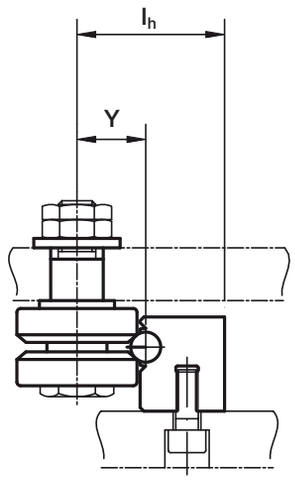

Type		Roller type FR/FRR..EU, FR/FRR..EU AS, FR/FRR..EU AZ, FRLK, FRLR, FRL		
		Y	l_y	l_h
FWS 22	**FWH 22**	12.4	58.8	29.4
FWS 32	**FWH 32**	18	78	39
FWS 40	**FWH 40**	22.4	98.8	49.4
FWS 52	**FWH 52**	28.4	122.8	61.4

Mounting Examples
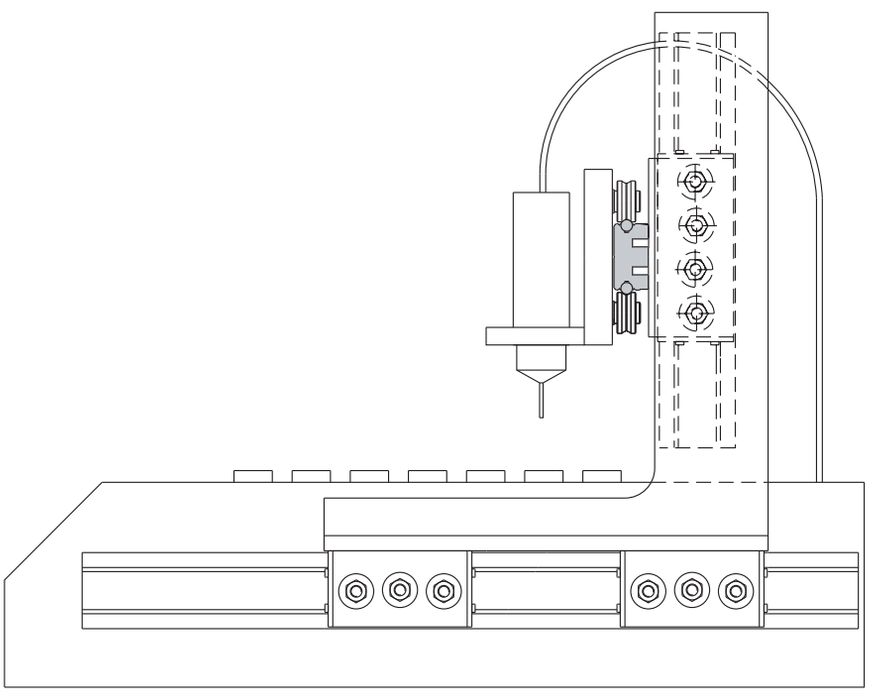
Glue dispensing machine